Tizio

Richard Sapper

IP20

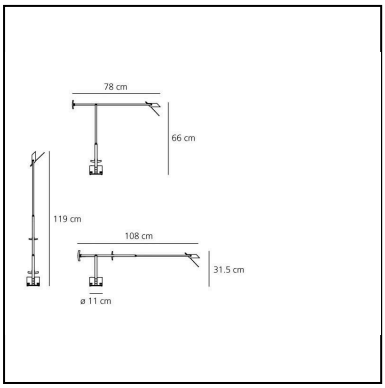

LUMINAIRE *

- Trasformer availability: **Integrated**
- Watt: **3,3W**
- Voltage: **220V-240V**
- Delivered lumen output: **191lm**
- Efficiency: **48%**
- Efficacy: **63.67lm/W**
- CRI: **80**

* Photometric data may vary depending on the source installed. Light measurements are provided in relative form and technical lighting calculations may be updated according to the effective source used.

DESCRIPTION

Artemide celebrates Tizio's 50th anniversary with a special version in Richard Sapper's favorite red.
Tizio is not only a masterpiece of Artemide collection but also an icon of Italian design.
Designed 50 years ago, it is still absolutely contemporary also thanks to a new integrated LED source.
An elegant synthesis of intelligent components elaborated by Richard Sapper has created a timeless product.
"*When we presented it, there was nothing like it on the market, it was revolutionary. Tizio is beautiful in any different position, it is a harmonious object in all its parts, you move it with one hand and it is always extremely precise. It is not that we don't change anything over the years because we can't, we don't change anything because that's the way it is.*"
Ernesto Gismondi, 2014

FEATURES

- Product Code: **A009010**
- Colour: **Black**
- Installation: **Table**
- Material: **aluminium, technopolymer**
- Series: **Design Collection**
- Environment: **Indoor**
- Area contract: **Hospitality, Office, Residential**
- Emission: **Direct Adjustable**
- design by: **Richard Sapper**

DIMENSIONS

- Length: **780 mm**
- Height: **660 mm**
- Base Diameter: **110 mm**
- Max Extension Height: **1190 mm**
- Max Extension Length: **1080 mm**
- Inclination: **-42+42**
- Impact Resistance: **N/D**
- Glow Wire Test: **N/D°**

SOURCES NOT INCLUDED

- Category: **LED RETROFIT**
- Number: **1**
- Watt: **MAX 2,5W**
- Socket: **GY6.35**

We reserve the right to change our product specifications. — Last update: March 2025
Please visit www.artemide.com for the latest product information

Artemide

Accessories

TIZIO NERA
SUPPORTO
TERRA A087700